1982 Police 1000 PARTS DIAGRAM

CYLINDER HEAD

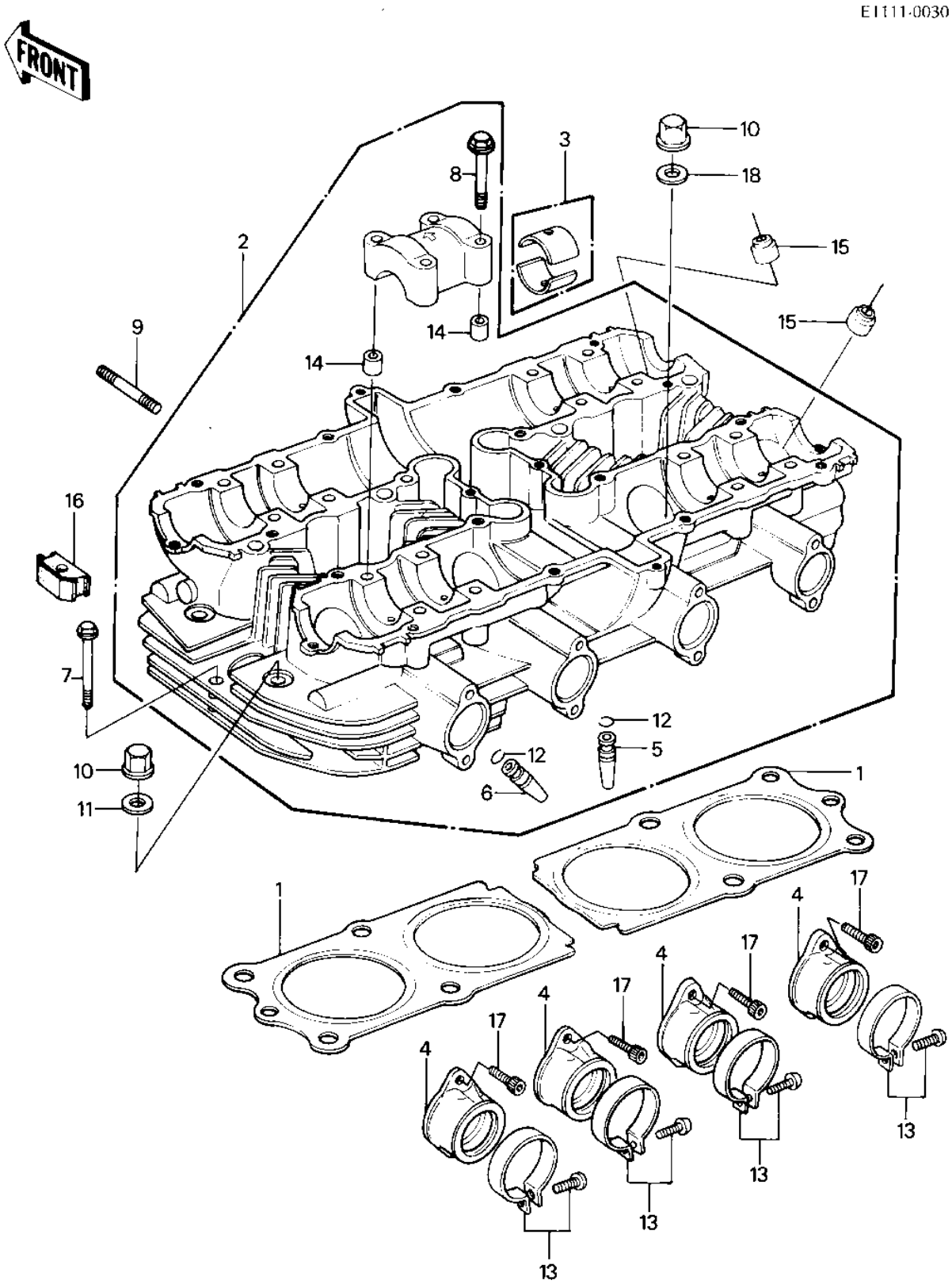

© 2024 Kawasaki Motors Corp., U.S.A.

1982 Police 1000 PARTS LIST

CYLINDER HEAD

ITEM NAME	PART NUMBER	QUANTITY
GASKET-HEAD (Ref # 1)	11004-1222	2
HEAD-COMP-CYLINDER,WH (Ref # 2)	11008-1013	1
HEAD-COMP-CYLINDER,SI (Ref # 2)	11008-1068	1
BUSHING,CAMSHAFT (Ref # 3)	13034-030	16
HOLDER-CARBURETOR (Ref # 4)	16065-1135	4
HOLDER-CARBURETOR (Ref # 4)	16065-1135	4
GUIDE,INLET VALVE (Ref # 5)	12013-009	4
GUIDE,EXHAUST VALVE (Ref # 6)	49002-1002	4
BOLT,HEX HEAD,6X45 (Ref # 7)	92003-092	2
BOLT,6X43 (Ref # 8)	92002-1881	16
BOLT,6X45 (Ref # 8)	92002-1300	16
STUD,8X30 (Ref # 9)	92004-1069	8
STUD,8X30 (Ref # 9)	92004-1121	8
NUT,CYLINDER HEAD (Ref # 10)	92015-076	12
WASHER,10.5X22X1.6 (Ref # 11)	92022-1005	4
CIRCLIP-VALVE (Ref # 12)	92036-023	8
CLAMP,53M/M (Ref # 13)	92037-201	4
CLAMP,ID=53,BLACK (Ref # 13)	92037-1304	4
PIN-DOWEL (Ref # 14)	92042-007	8
OIL SEAL,RV37129.5 (Ref # 15)	92049-016	8
PLUG,CYLNDR HD COVER (Ref # 16)	92066-1106	4
PLUG,CYLNDR HD COVER (Ref # 16)	92066-1106	4
BOLT-SOCKET,6X16,BLAC (Ref # 17)	120S0616	8
BOLT,6X16 (Ref # 17)	92002-1143	8
WASHER PLAIN 10MM (Ref # 18)	411B1000	8

© 2024 Kawasaki Motors Corp., U.S.A.