1982 Police 1000 PARTS DIAGRAM

OIL PUMP/OIL FILTER

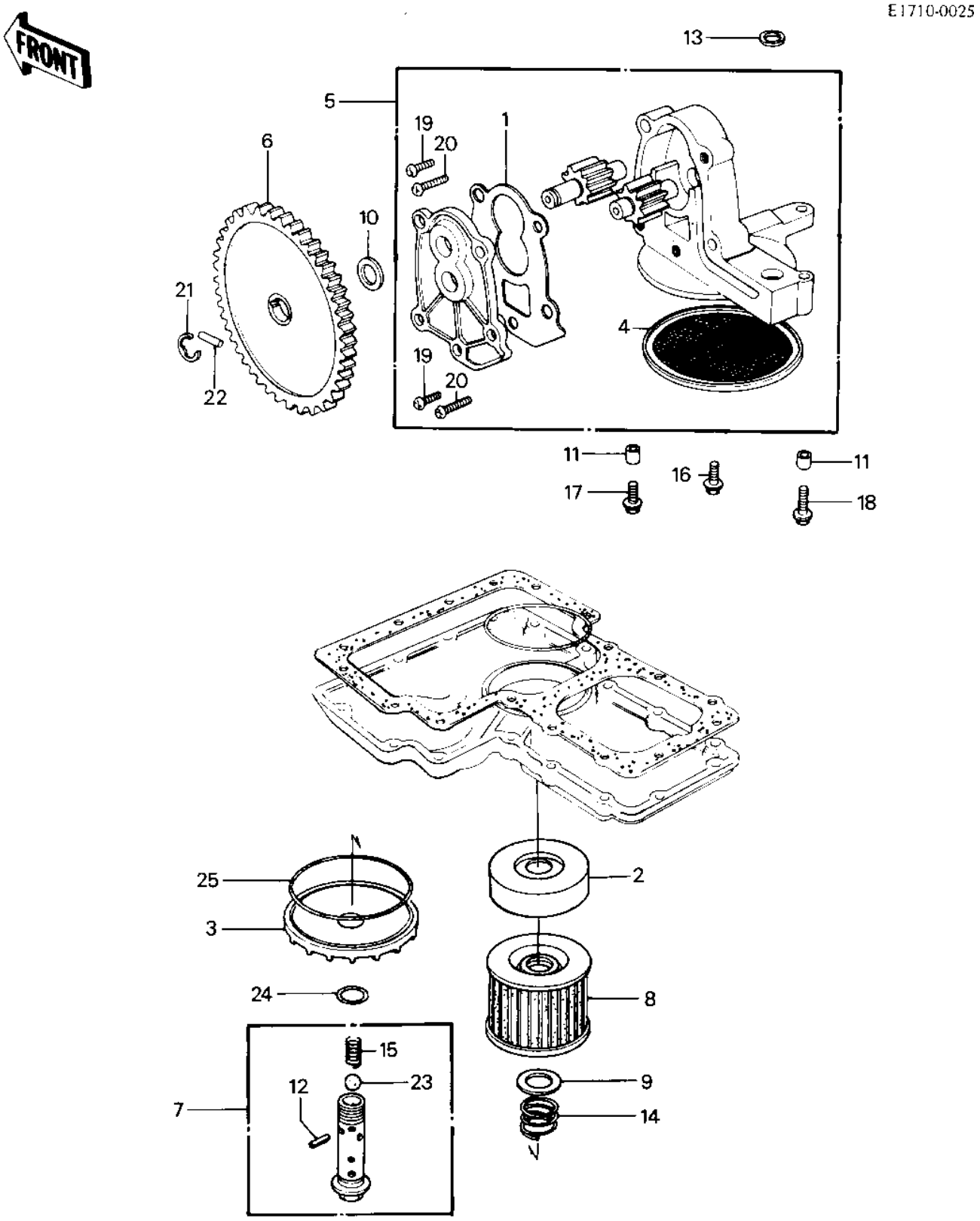

© 2024 Kawasaki Motors Corp., U.S.A.

1982 Police 1000 PARTS LIST

OIL PUMP/OIL FILTER

ITEM NAME	PART NUMBER	QUANTITY
GASKET,OIL PUMP (Ref # 1)	11009-1029	1
PLATE,OIL FILTER (Ref # 2)	13169-1313	1
COVER,OIL FILTER (Ref # 3)	16101-004	1
STRAINER,OIL PUMP (Ref # 4)	16111-004	1
PUMP-ASSY-OIL (Ref # 5)	16082-5001	1
PUMP-ASSY-OIL (Ref # 5)	16082-1032	1
GEAR,OIL PUMP 49T (Ref # 6)	16085-019	1
GEAR,OIL PUMP,49T (Ref # 6)	16085-1038	1
VALVE,OIL FILTER (Ref # 7)	16126-1108	1
VALVE,OIL FILTER (Ref # 7)	16126-1108	1
FILTER,OIL (Ref # 8)	16099-003	1
WASHER,20.5X30X1.0 (Ref # 9)	92022-1012	1
WASHER,LOCK,16MM (Ref # 10)	92026-080	1
PIN,DOWEL,8X10 (Ref # 11)	92043-1302	2
SPRING PIN (Ref # 12)	92043-111	1
O RING,0.D=18MM (Ref # 13)	92055-048	1
SPRING,OIL FILTER (Ref # 14)	92081-1018	1
SPRING (Ref # 15)	92081-109	1
BOLT,FLANGED,6X25 (Ref # 16)	130G0625	1
BOLT,FLANGED,6X35 (Ref # 17)	130H0635	1
BOLT,FLANGED,6X45 (Ref # 18)	130G0645	1
SCREW PAN HEAD 6X18 (Ref # 19)	220B0618	4
SCREW PAN HEAD 6X28 (Ref # 20)	220B0628	2
CIRCLIP,7MM (Ref # 21)	482K7000	1
PIN,DOWEL,3X14 (Ref # 22)	551A0314	1
PIN,GEAR CHANGE DRUM (Ref # 22)	92042-042	1
BALL STEEL 3/8' (Ref # 23)	600A1200	1
"0" RING,16MM (Ref # 24)	670B2016	1
UNAVAILABLE IN PRICE BOOK (Ref # 25)	671N2590	1

© 2024 Kawasaki Motors Corp., U.S.A.