1982 Police 1000 PARTS DIAGRAM

REAR BRAKE

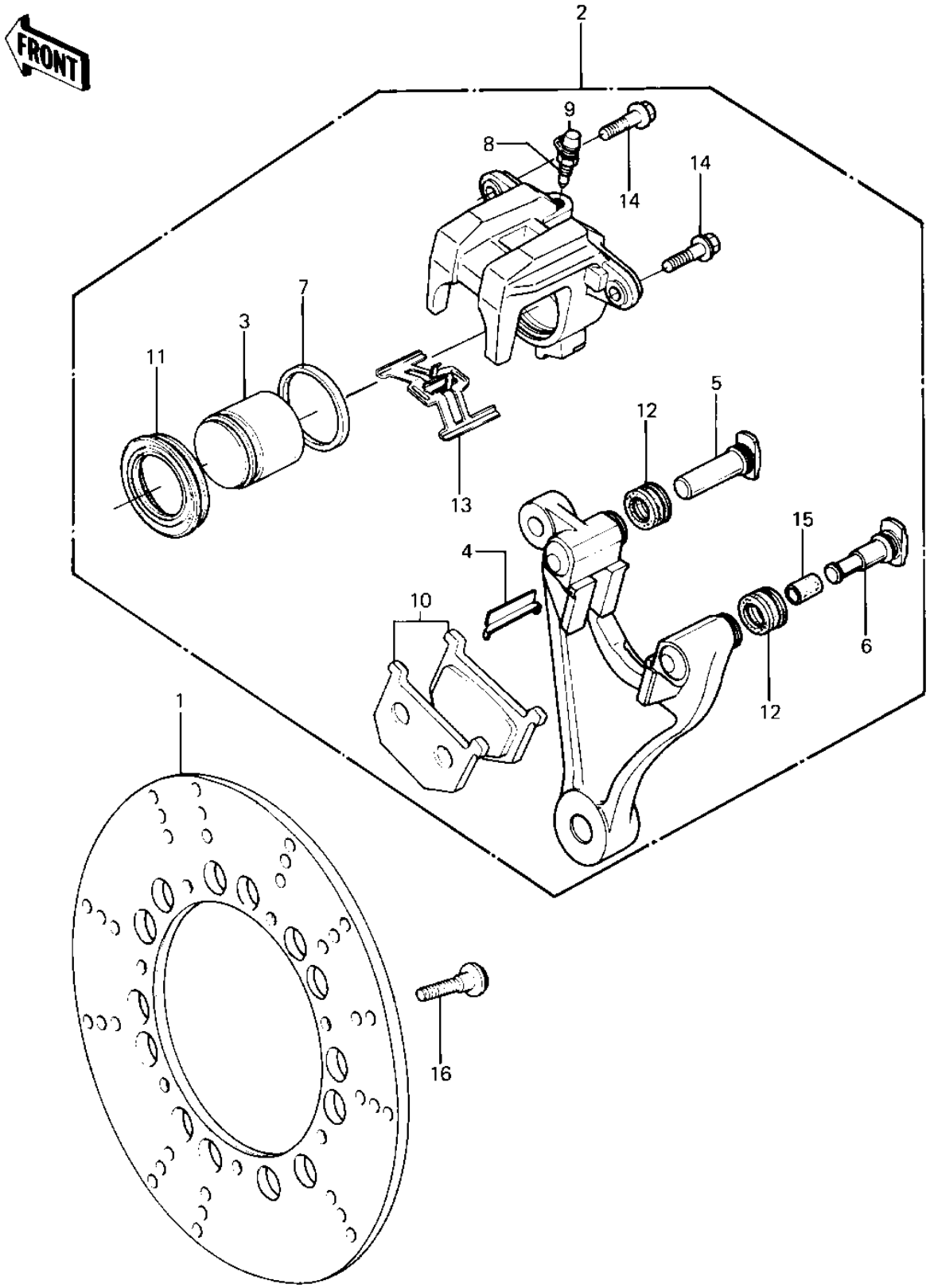

© 2024 Kawasaki Motors Corp., U.S.A.

1982 Police 1000 PARTS LIST

REAR BRAKE

ITEM NAME	PART NUMBER	QUANTITY
DISC,RR,SILVER (Ref # 1)	41080-1128	1
DISC,RR,SILVER (Ref # 2)	41080-1128	1
CALIPER-ASSY,RR (Ref # 2)	43041-1047	1
PISTON-COMP-BRAKE (Ref # 3)	43020-1096	1
GUIDE,PAD (Ref # 4)	13070-1026	2
SHAFT,CALIPER (Ref # 5)	43045-1007	1
SHAFT,CALIPER (Ref # 6)	43045-1008	1
RING,PISTON SEAL (Ref # 7)	43049-002	1
BREEDER (Ref # 8)	43056-003	1
CAP,BREEDER (Ref # 9)	43057-003	1
PAD-ASSY,RR (Ref # 10)	43082-1022	1
DUST SEAL,PISTON (Ref # 11)	49006-1043	1
DUST SEAL (Ref # 12)	49006-1044	2
SPRING,PAD (Ref # 13)	92081-1229	1
BOLT,FLANGED,8X25,BLA (Ref # 14)	92001-1510	2
BOLT,FLANGED,8X25,BLA (Ref # 14)	92001-1510	2
BUSHING,SHAFT CALIPER (Ref # 15)	92028-1090	1
BOLT,SOCKET,8X30 (Ref # 16)	92001-1951	7
BOLT,SOCKET,8X30 (Ref # 16)	92001-1951	7

© 2024 Kawasaki Motors Corp., U.S.A.