1985 GPz 750 Turbo PARTS DIAGRAM

SWING ARM

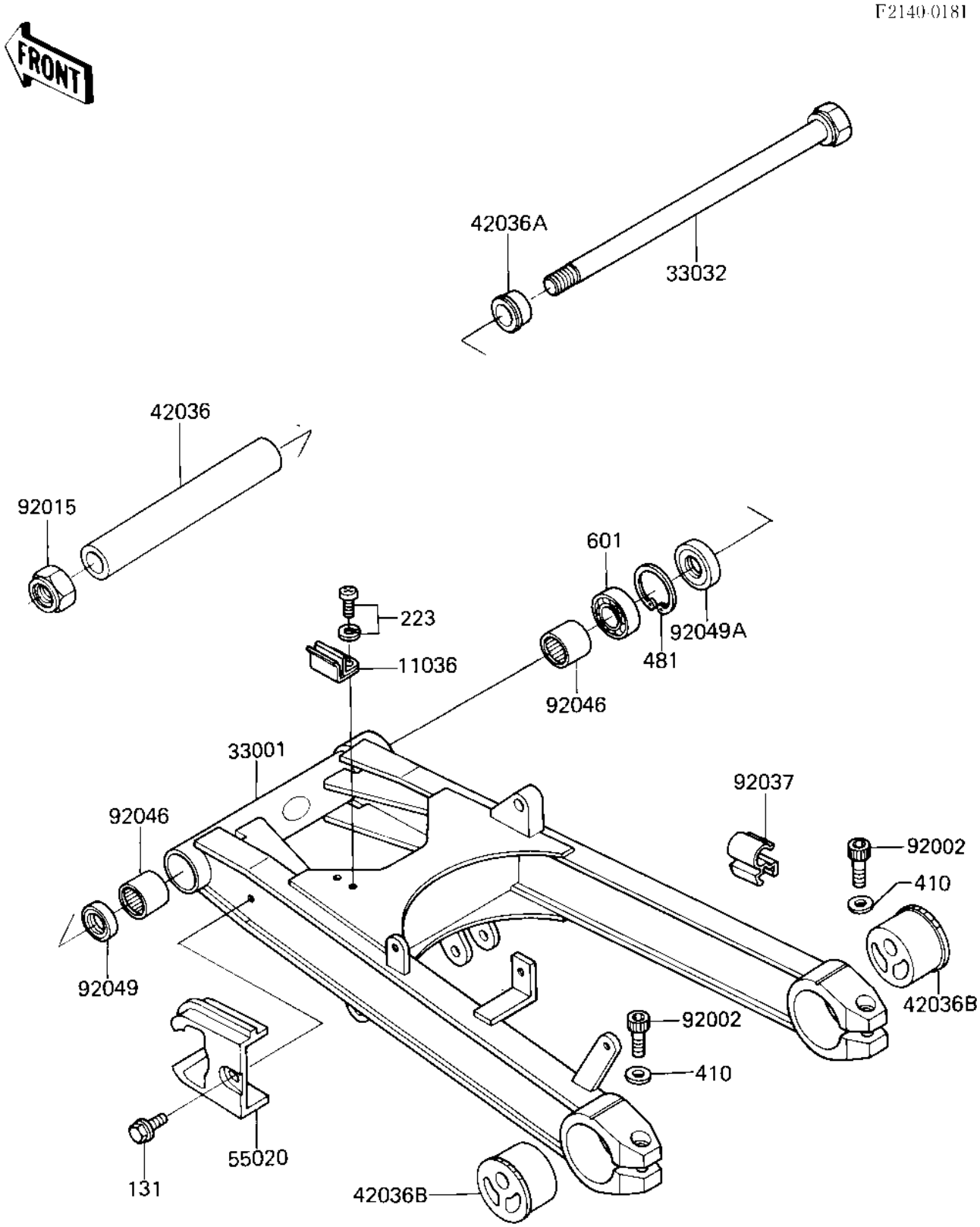

© 2024 Kawasaki Motors Corp., U.S.A.

1985 GPz 750 Turbo PARTS LIST

SWING ARM

ITEM NAME	PART NUMBER	QUANTITY
BRACKET-A,CAIN CASE (Ref # 11036)	11036-1868	1
ARM-COMP-SWING,G.SILV (Ref # 33001)	33001-1204-F2	1
SHAFT-SWING ARM (Ref # 33032)	33032-1040	1
SLEEVE,17.1X25X212 (Ref # 42036)	42036-1080	1
SLEEVE,17.1X24X11.5 (Ref # 42036A)	42036-1081	1
SLEEVE,AXLE,RR (Ref # 42036B)	42036-1082	2
GUARD,CHAIN (Ref # 55020)	55020-1153	1
BOLT (Ref # 92002)	92002-1452	2
NUT,LOCK,16MM,BLACK (Ref # 92015)	92015-1207	1
CLAMP,BRAKE HOSE (Ref # 92037)	92037-1392	2
BEARING-NEEDLE (Ref # 92046)	92046-1035	2
SEAL-OIL (Ref # 92049)	92049-1060	1
SEAL-OIL,AG1258A0 (Ref # 92049A)	92049-1110	1
BOLT-FLANGED (Ref # 131)	131G0516	1
SCREW-PAN-WS-CROS (Ref # 223)	223X0508	2
W-PLAIN-S (Ref # 410)	410E1000	2
RING, SNAP,43.5M/M (Ref # 481)	92033-1040	1
BEARING BALL #6203 (Ref # 601)	601A6203	1

© 2024 Kawasaki Motors Corp., U.S.A.