1976 KE100 PARTS DIAGRAM

BATTERY CASE

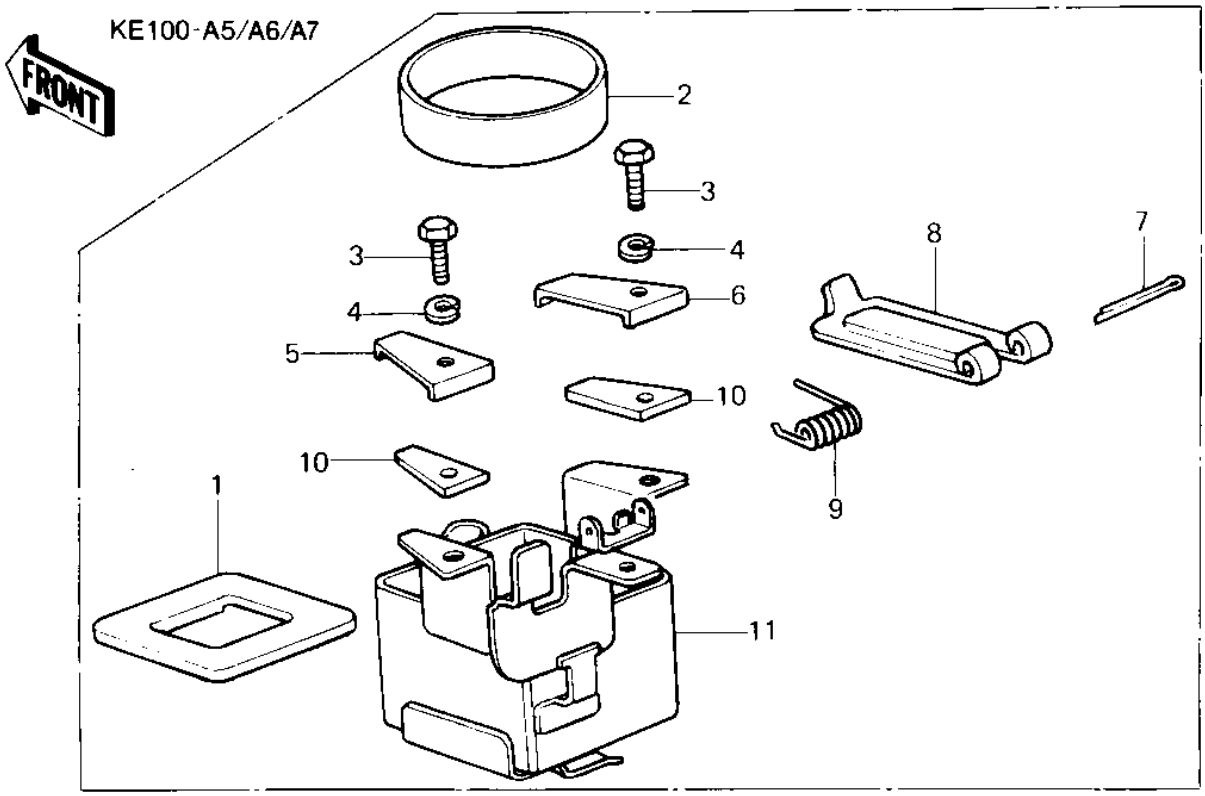

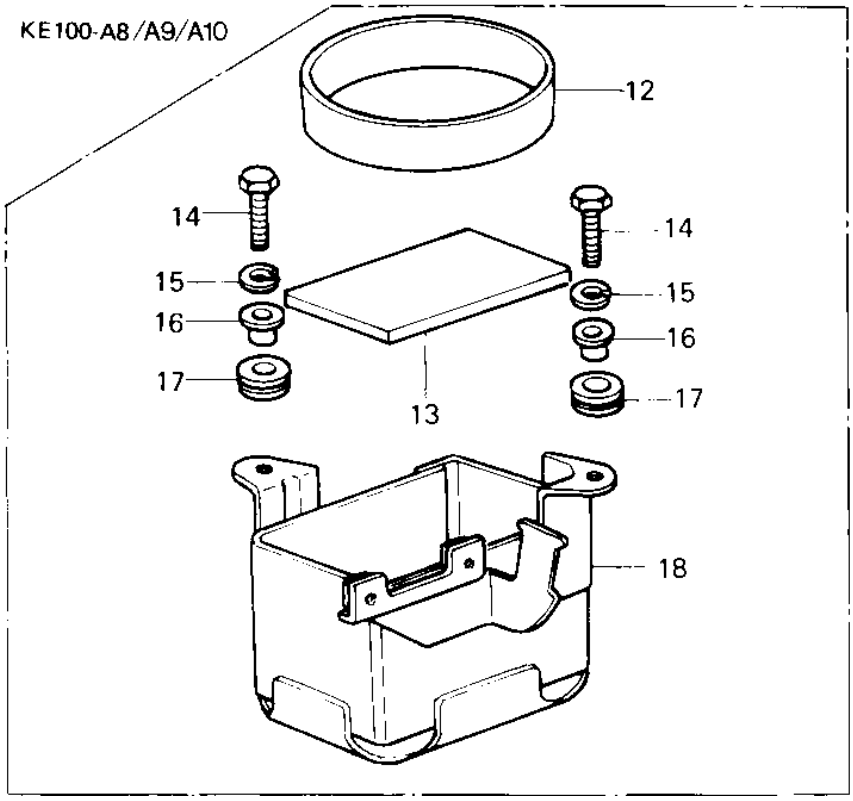

© 2024 Kawasaki Motors Corp., U.S.A.

1976 KE100 PARTS LIST

BATTERY CASE

ITEM NAME	PART NUMBER	QUANTITY
MAT-BATTERY (Ref # 1)	32103-024	1
MAT-BATTERY (Ref # 2)	32103-018	1
BOLT-UPSET (Ref # 3)	112G0618	2
WASHER SPRING 6MM (Ref # 4)	461F0600	2
PLATE-BATTERY CASE,LH (Ref # 5)	32101-003	1
PLATE-BATTERY CASE,RH (Ref # 6)	32101-004	1
PIN,COTTER,2.5X40 (Ref # 7)	550D2540	1
BAND-BATTERY (Ref # 8)	92072-037	1
SPRING-RETURN (Ref # 9)	92083-017	1
DAMPER RUBBER (Ref # 10)	92075-108	2
CASE,BATTERY (Ref # 11)	32097-034	1
MAT-BATTERY SIDE (Ref # 12)	32103-023	1
MAT,BATTERY (Ref # 13)	32103-027	1
BOLT-UPSET,6X20 (Ref # 14)	112G0620	2
WASHER SPRING 6MM (Ref # 15)	461F0600	2
COLLAR (Ref # 16)	92027-153	2
DAMPER RUBBER (Ref # 17)	92075-051	2
CASE,BATTERY (Ref # 18)	32097-1009	1

© 2024 Kawasaki Motors Corp., U.S.A.