1976 KE100 PARTS DIAGRAM

FRONT HUB/BRAKE

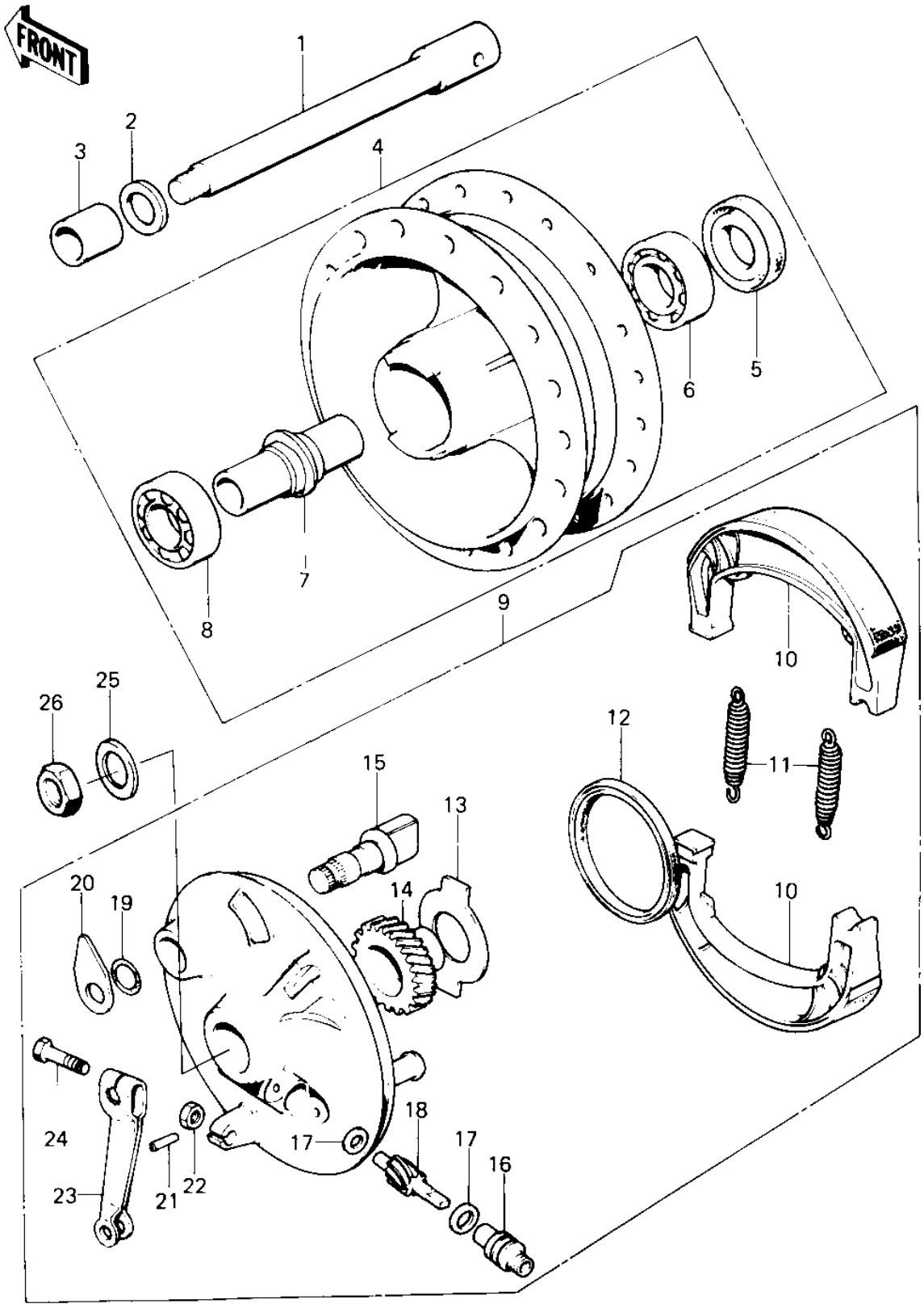

© 2024 Kawasaki Motors Corp., U.S.A.

1976 KE100 PARTS LIST

FRONT HUB/BRAKE

ITEM NAME	PART NUMBER	QUANTITY
AXLE-FRONT (Ref # 1)	41068-039	1
DUST SHIELD FRNT DRUM (Ref # 2)	41042-002	1
WASHER PLAIN 10MM (Ref # 2)	411B1000	1
COLLAR FRONT HUB R.H (Ref # 3)	41069-002	1
COLLAR,FRONT AXLE (Ref # 3)	41069-026	1
DRUM-ASSY,FR BRK (Ref # 4)	41034-1040	1
DRUM-ASSY,FR BRK (Ref # 4)	41034-1040	1
OIL SEAL,TC17317 (Ref # 5)	92050-063	1
BEARING BALL #6200 (Ref # 6)	601B6200	1
SPACER FRONT HUB (Ref # 7)	41039-002	1
BEARING BALL #6300Z (Ref # 8)	601B6300Z	1
PANEL-ASY,FR BRK BUFF (Ref # 9)	41035-071-80	1
SHOE-BRAKE (Ref # 10)	41048-1085	2
SPRING,BRAKE SHOE (Ref # 11)	92081-1766	2
OIL SEAL BRAKE PANEL (Ref # 12)	92050-002	1
RECEIVER,SPEED GEAR (Ref # 13)	41064-010	1
GEAR,SPEEDOMETER (Ref # 14)	41059-022	1
CAM SHAFT-FRONT BRAKE (Ref # 15)	41050-018	1
BUSH,SPEEDMETER CABLE (Ref # 16)	41062-005	1
WASHER THRST SPD PINI (Ref # 17)	41063-001	2
PINION SPEEDOMETER (Ref # 18)	41060-004	1
PINION SPEEDOMETER (Ref # 18)	41060-004	1
"0" RING,11MM (Ref # 19)	92055-004	1
INDICATOR,BK SHOE (Ref # 20)	41085-008	1
PIN,SPRING (Ref # 21)	41082-001	1
NUT,6MM (Ref # 22)	41072-007	1
LEVER FRONT BRAKE CAM (Ref # 23)	41053-005	1
BOLT-UPSET (Ref # 24)	112G0630	1
WASHER PLAIN 10MM (Ref # 25)	411B1000	1

© 2024 Kawasaki Motors Corp., U.S.A.