1993 Police 1000 PARTS DIAGRAM

Brake Pedal/Torque Link

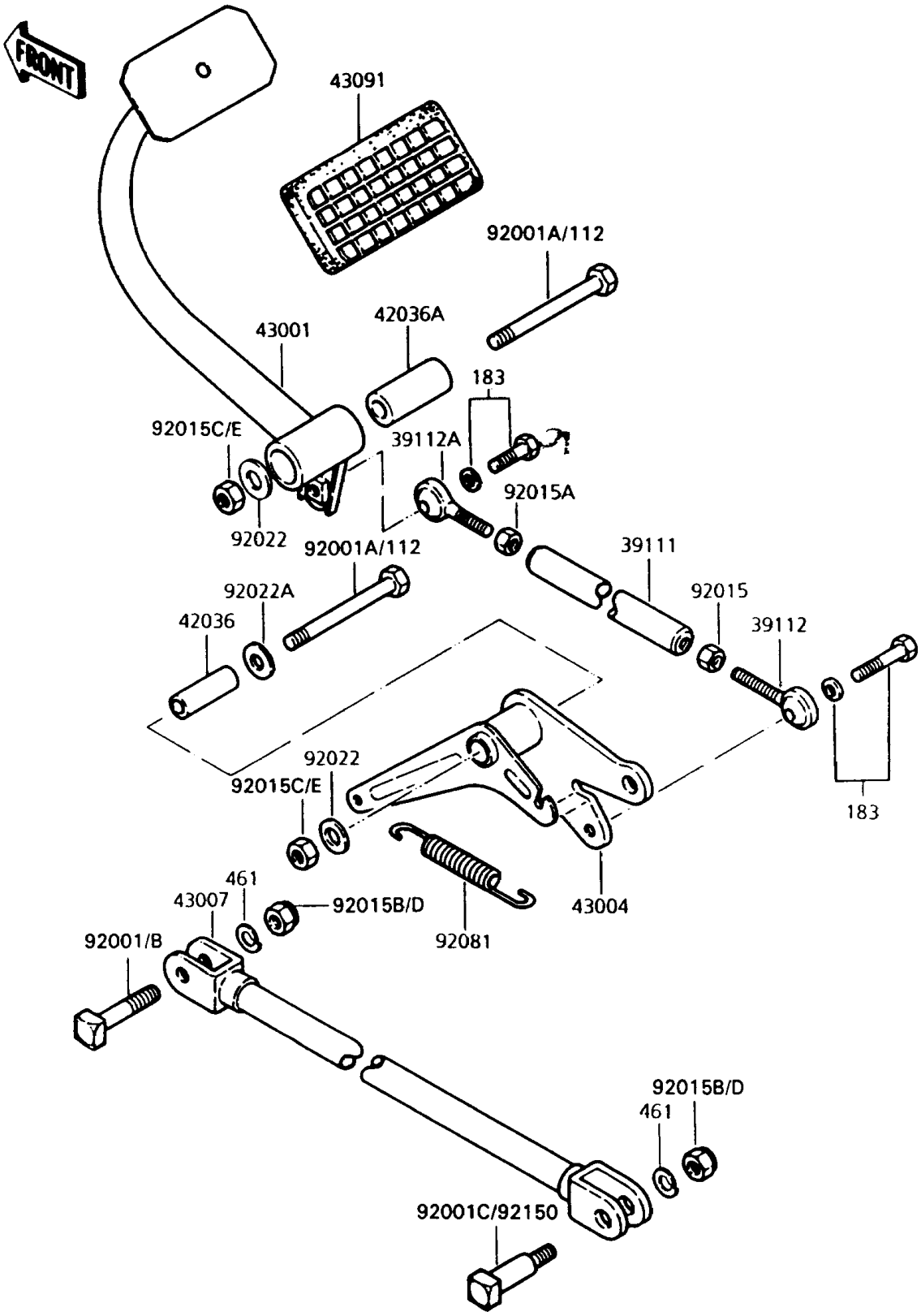

© 2024 Kawasaki Motors Corp., U.S.A.

1993 Police 1000 PARTS LIST

Brake Pedal/Torque Link

ITEM NAME	PART NUMBER	QUANTITY
ROD-TIE,L=360 (Ref # 39111)	39111-4002	1
RODEND-TIE,RH THREAD (Ref # 39112)	39112-1001	1
RODEND-TIE,LH THREAD (Ref # 39112A)	39112-1002	1
SLEEVE (Ref # 42036)	42036-4005	1
SLEEVE,CHANGE LEVER (Ref # 42036A)	42036-4006	1
LEVER-BRAKE,PEDAL (Ref # 43001)	43001-4015	1
SHAFT-BRAKE,PEDAL (Ref # 43004)	43004-4002	1
ROD-TORQUE,RR (Ref # 43007)	43007-1015	1
RUBBER,BRAKE PEDAL (Ref # 43091)	43091-002	1
BOLT,10X45 (Ref # 92001)	92001-1208	1
NUT,RH THREAD (Ref # 92015)	92015-1005	1
NUT,LH THREAD (Ref # 92015A)	92015-1006	1
NUT,LOCK,10MM (Ref # 92015D)	92015-1429	2
NUT,LOCK,10MM (Ref # 92015E)	92015-1962	2
WASHER,10.5X26X2.3 (Ref # 92022)	92022-044	2
WASHER,10.5X22X4.5 (Ref # 92022A)	92022-1022	1
SPRING,BRAKE PEDAL (Ref # 92081)	92081-1296	1
BOLT,10X37 (Ref # 92150)	92150-1901	1
BOLT-UPSET (Ref # 112)	112G1085	2
BOLT-UPSET-WS-SMALL (Ref # 183)	183G0825	2
WASHER-SPRING,10MM (Ref # 461)	461F1000	2

© 2024 Kawasaki Motors Corp., U.S.A.