1993 Police 1000 PARTS DIAGRAM

Front Brake

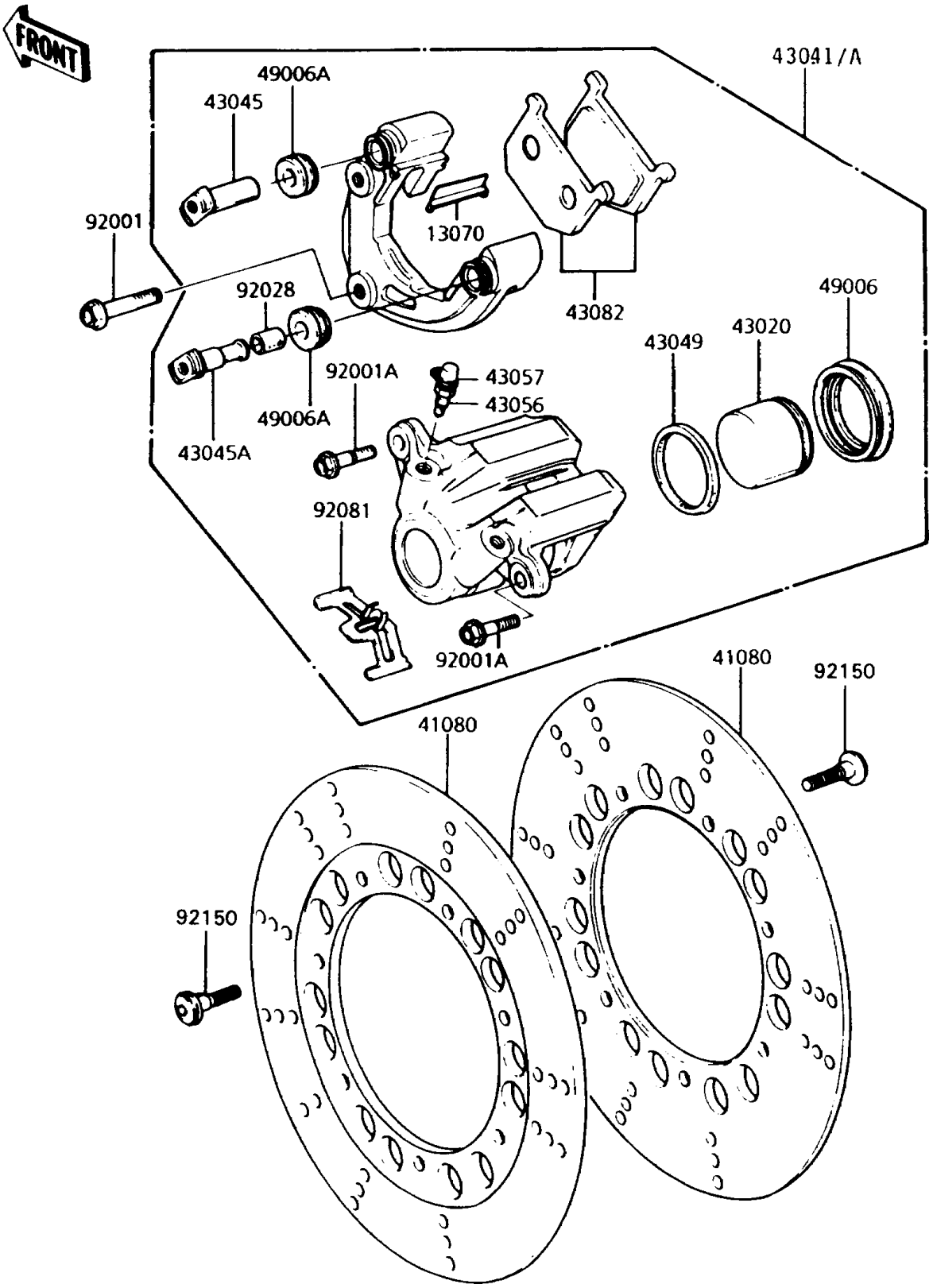

© 2024 Kawasaki Motors Corp., U.S.A.

1993 Police 1000 PARTS LIST

Front Brake

ITEM NAME	PART NUMBER	QUANTITY

© 2024 Kawasaki Motors Corp., U.S.A.