1999 Vulcan 1500 Drifter PARTS DIAGRAM

Cables

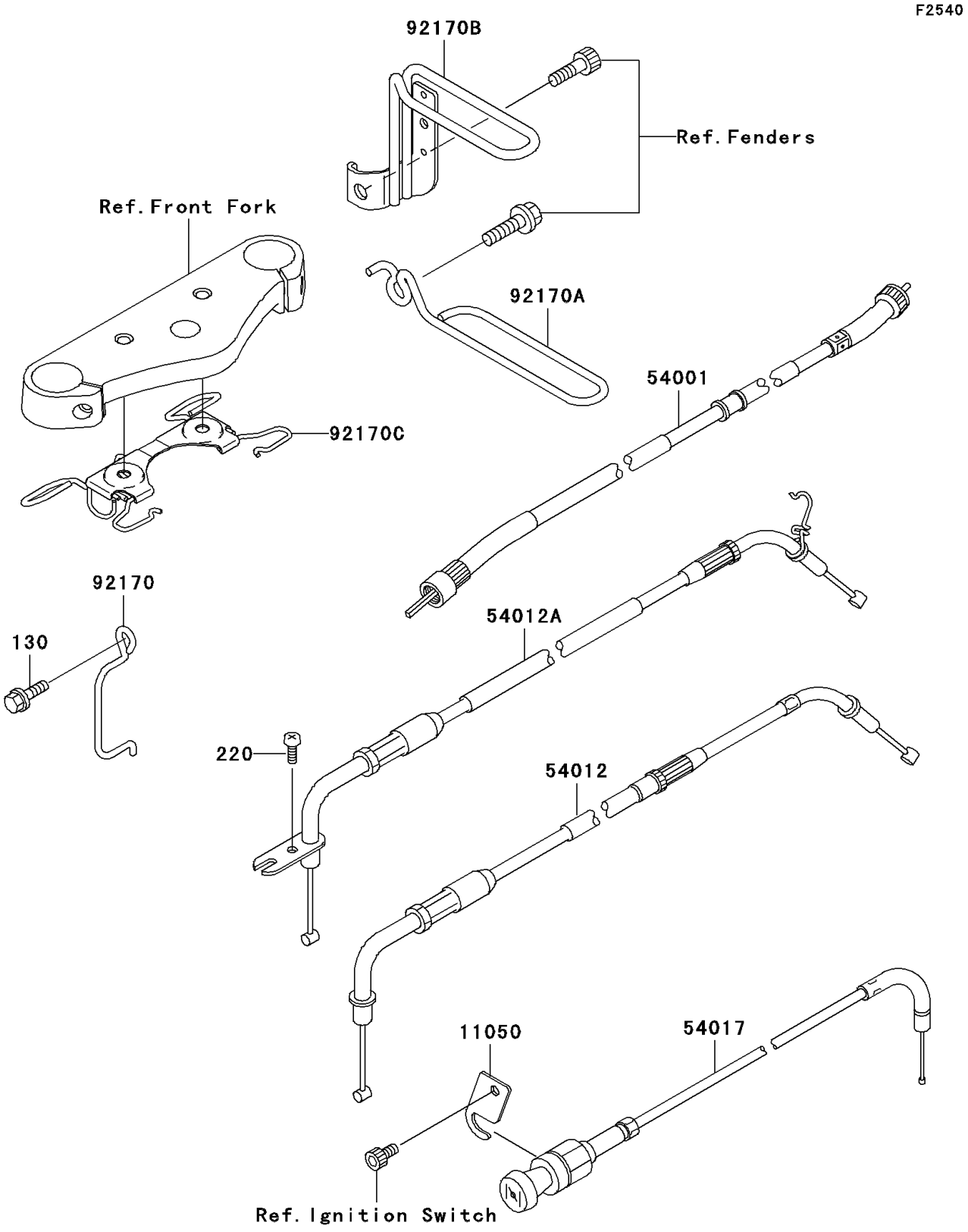

© 2024 Kawasaki Motors Corp., U.S.A.

1999 Vulcan 1500 Drifter PARTS LIST

Cables

ITEM NAME	PART NUMBER	QUANTITY
BOLT-FLANGED,6X14,BLACK (Ref # 130)	130J0614	1
SCREW-PAN-CROS (Ref # 220)	220C0514	1
BRACKET,STARTER CABLE (Ref # 11050)	11050-1699	1
CABLE-SPEEDMETER (Ref # 54001)	54001-1239	1
CABLE-THROTTLE,CLOSING (Ref # 54012)	54012-1603	1
CABLE-THROTTLE,OPENING (Ref # 54012A)	54012-1610	1
CABLE-STARTER (Ref # 54017)	54017-1202	1
CLAMP,CABLE (Ref # 92170)	92170-1867	1
CLAMP,CABLE (Ref # 92170A)	92170-1970	1
CLAMP,METER CABLE (Ref # 92170B)	92170-1971	1
CLAMP (Ref # 92170C)	92170-1990	1

© 2024 Kawasaki Motors Corp., U.S.A.