1999 Vulcan 1500 Drifter PARTS DIAGRAM

Owner's Tools

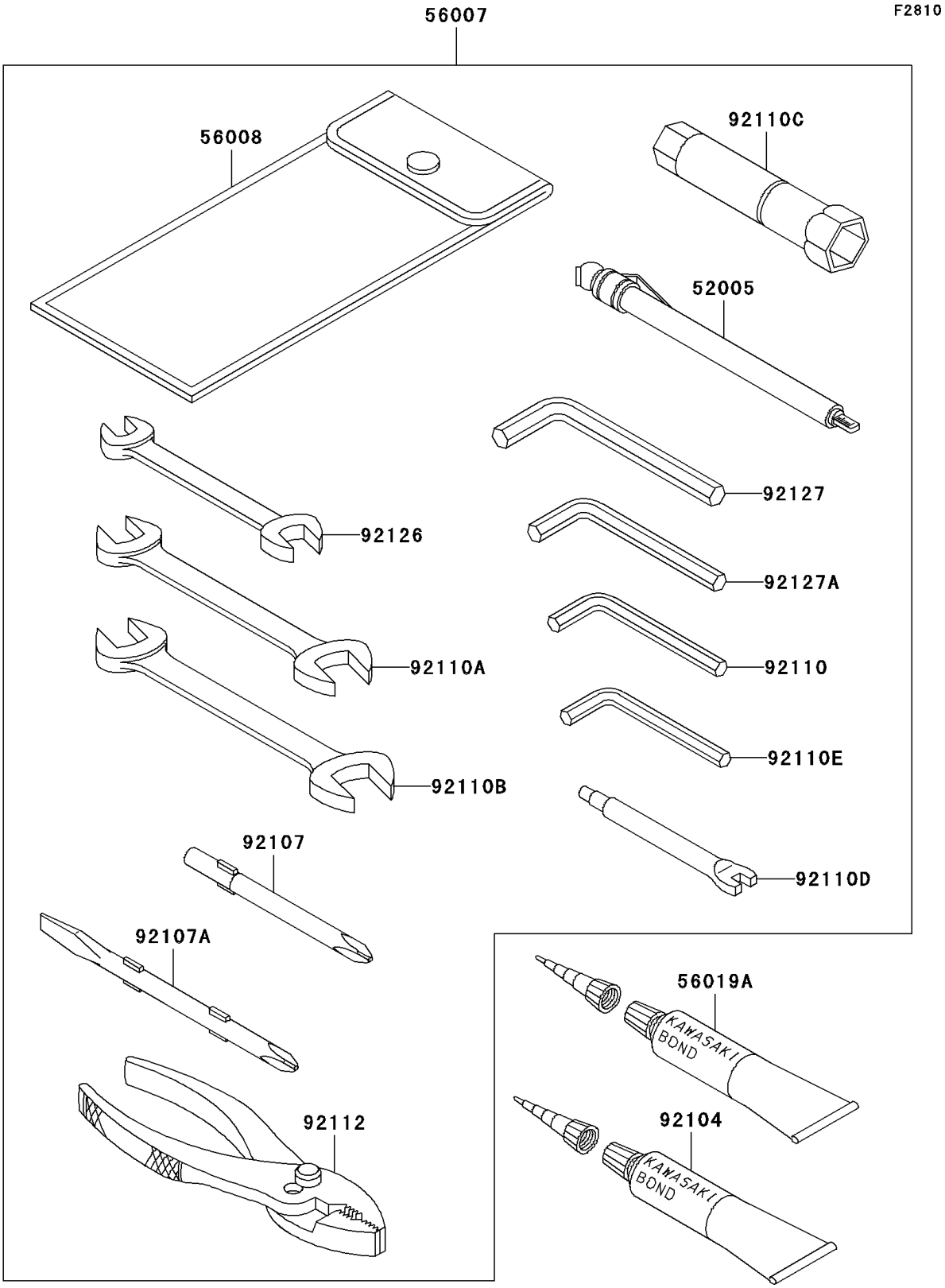

© 2024 Kawasaki Motors Corp., U.S.A.

1999 Vulcan 1500 Drifter PARTS LIST

Owner's Tools

ITEM NAME	PART NUMBER	QUANTITY

© 2024 Kawasaki Motors Corp., U.S.A.