1996 GPZ 1100 PARTS DIAGRAM

Engine Cover(s)

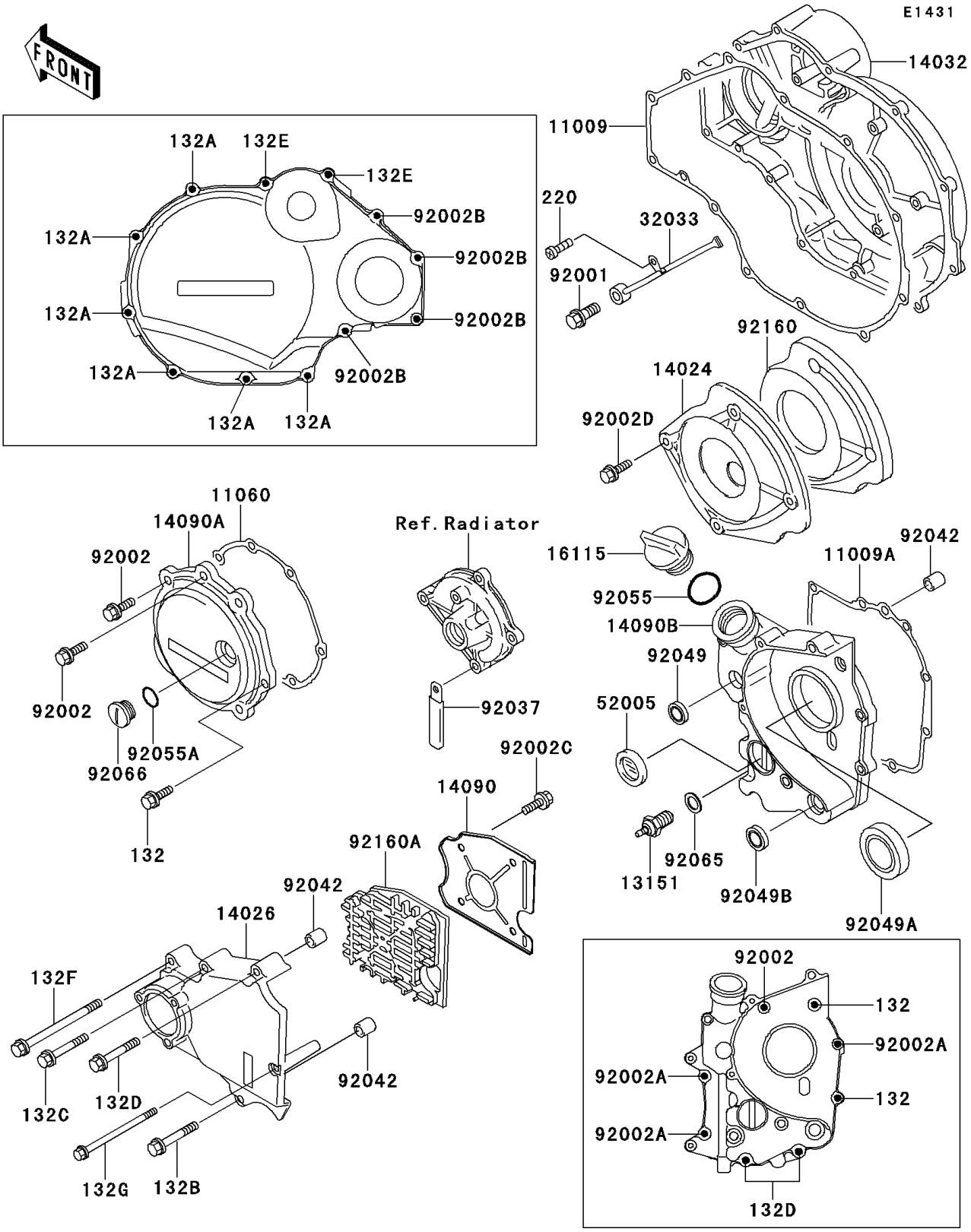

© 2024 Kawasaki Motors Corp., U.S.A.

1996 GPZ 1100 PARTS LIST

Engine Cover(s)

ITEM NAME	PART NUMBER	QUANTITY
BOLT-FLANGED-SMALL (Ref # 132)	132J0620	7
BOLT-FLANGED-SMALL (Ref # 132A)	132J0625	6
BOLT-FLANGED-SMALL (Ref # 132B)	132J0635	1
BOLT-FLANGED-SMALL,6X40 (Ref # 132C)	132J0640	1
BOLT-FLANGED-SMALL (Ref # 132D)	132J0650	3
BOLT-FLANGED-SMALL,6X55 (Ref # 132E)	132J0655	2
BOLT-FLANGED-SMALL (Ref # 132F)	132J0665	1
BOLT-FLANGED-SMALL (Ref # 132G)	132J0680	1
SCREW-PAN-CROS (Ref # 220)	220B0510	1
GASKET,CLUTCH COVER (Ref # 11009)	11009-1860	1
GASKET,TRANSMISSION COVER (Ref # 11009A)	11009-1982	1
GASKET,PULSING COVER (Ref # 11060)	11060-1695	1
SWITCH-COMP,NEUTRAL (Ref # 13151)	13151-1080	1
COVER,SOUND ARRESTER (Ref # 14024)	14024-1925	1
COVER-CHAIN (Ref # 14026)	14026-1214	1
COVER-CLUTCH (Ref # 14032)	14032-1402	1
COVER,SOUND ARRESTER (Ref # 14090)	14090-1527	1
COVER,PULSING (Ref # 14090A)	14090-1537	1
COVER,TRANSMISSION (Ref # 14090B)	14090-1538	1
CAP-OIL FILLER (Ref # 16115)	16115-1009	1
PIPE,CLUTCH COVER (Ref # 32033)	32033-1204	1
GAUGE,OIL LEVEL (Ref # 52005)	52005-1057	1
BOLT,BANJO,8X20 (Ref # 92001)	92001-1855	1
BOLT,6X20 (Ref # 92002)	92002-1343	3
BOLT,6X25 (Ref # 92002A)	92002-1344	3
BOLT,6X40 (Ref # 92002B)	92002-1345	4
BOLT,6X10 (Ref # 92002C)	92002-1449	4
BOLT,6X10 (Ref # 92002D)	92002-1541	4
CLAMP,WIRING HARNESS (Ref # 92037)	92037-1069	1

© 2024 Kawasaki Motors Corp., U.S.A.

1996 GPZ 1100 PARTS LIST

Engine Cover(s)

ITEM NAME	PART NUMBER	QUANTITY
PIN,DOWEL,6.3X8X14 (Ref # 92042)	92042-007	4
SEAL-OIL,SD-8187 (Ref # 92049)	92049-1017	1
SEAL-OIL,AE2343F0 (Ref # 92049A)	92049-1070	1
SEAL-OIL,TB13205 (Ref # 92049B)	92049-1186	1
RING-O,31.5X2.6 (Ref # 92055)	92055-049	1
RING-O (Ref # 92055A)	92055-1146	1
GASKET,10.5X16X1,DRAIN PLUG (Ref # 92065)	92065-058	1
PLUG,COVER (Ref # 92066)	92066-1163	1
DAMPER,SOUND ARRESTER (Ref # 92160)	92160-1567	1
DAMPER,SOUND ARRESTER (Ref # 92160A)	92160-1568	1

© 2024 Kawasaki Motors Corp., U.S.A.